# IP67 Ultra thin side-emitting Underground Light

Driver-over LED Light/Stainless Steel trim

1E826307UM

2E826307UM

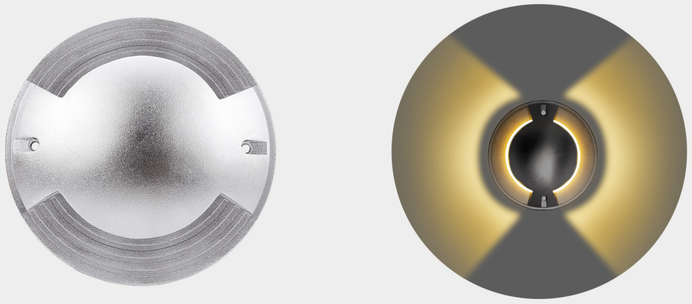

4E826307UM

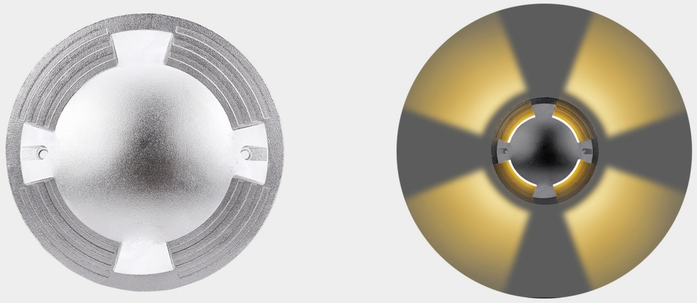

## Size（unit : mm）

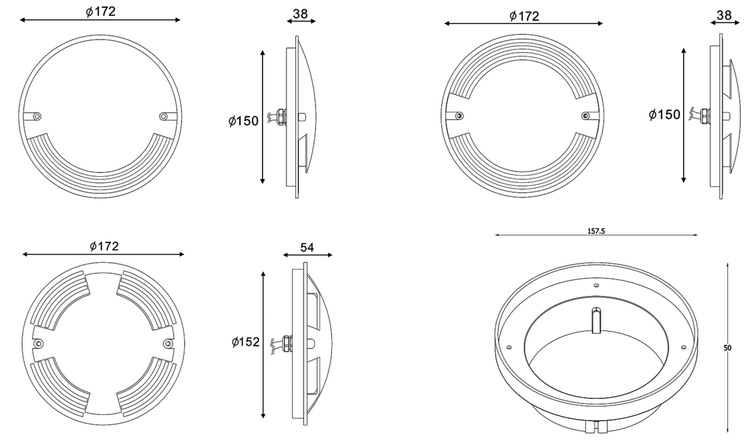


Mounting sleeve

## Material specifications

| | |
|---|---|
| Housing: | Pure aluminum 6063# housing, outdoor powder painted or anti-UV anodized |
| Front cover: | Hard chrome plate 304# or 316#Stainless Steel |
| Diffuser: | PMMA |
| Pressure capacity: | ＞2000kgs |
| Gasket: | Molding shaped silicone seal |
| Operating temperature: | -20°C～40°C |
| Power cable: | H05RN-F 2x0.75mm²L=0.5m(low voltage)<br>H05RN-F 4x0.75mm²L=0.5m(for RGB) |
| Mounting sleeve: | PVC |

| Item No. | Light source | Lens beam angle ( ° ) | Consumption ( watt) | Input Voltage ( V ) | Ik rate |
|---|---|---|---|---|---|
| 1E826307UM | OSRAM SMD LED | One window | 10.0 | DC24V | 10 |
| 2E826307UM | OSRAM SMD LED | Two windows | 10.0 | DC24V | 10 |
| 4E826307UM | OSRAM SMD LED | Four windows | 10.0 | DC24V | 10 |