Side-emitting inground light

with stainless steel face cover

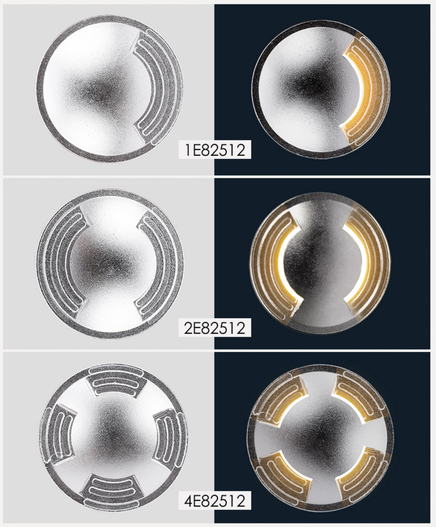

Material specifications

Housing:	Outdoor dark grey powder coated aluminum T=60-80um Adhesion of ISO class 1/ASTM class 4B
Front cover:	Hard chrome plate 304# or 316#Stainless Steel
Lens:	Optical lens, efficiency≥85%
Glass:	PMMA diffuser
Glass pressure capacity:	>1200kgs
Gasket:	Molding shaped silicone seal
Operating temperature:	-20˚C ~ 40˚C
Power cable:	H05RN-F 2×0.75mm² L=0.5m(low voltage) H05RN-F 3×0.75mm² L=0.5m(for Single color/high voltage) H05RN-F 4×0.75mm² L=0.5m(for RGB)
Mounting sleeve:	ABS

Outer Dimersions: Unit:mm

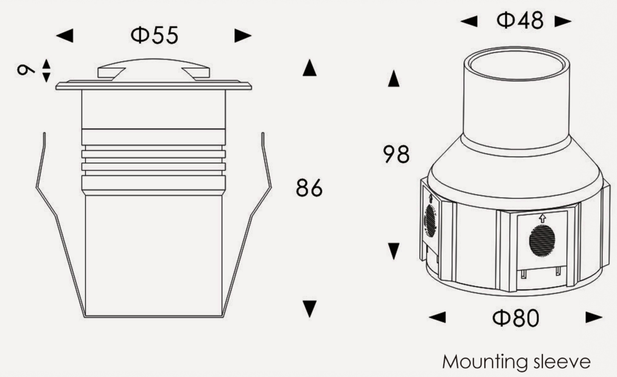

***Note:**
1. Item No. with "H" stands for "input voltage AC100-240V"
2. Any special customization, to be confirmed with us

Item No.	Light source	Lens beam angle(˚)	Consumption (watt)	Input Voltage(V)	Ik rate
1E82511(H)/2E82511(H)/ 4E82511(H)	1x1W LED	8°/15°/30°/45°/60°	1.2	DC12V DC24V AC100-240V	10
1E82512(H)/2E82512(H)/ 4E82512(H)	1x2W LED	8°/15°/30°/45°/60°	2.6	DC12V DC24V AC100-240V	10
1E82516/2E82516/4E82516	1x3W RGB3in1 LED	30°/45°/60°	3.1	DC12V DC24V	10