LED Garden Spot Light
LED Spike Light

S83312

S83312+antiglare hood

Outer Dimensions

Unit:mm

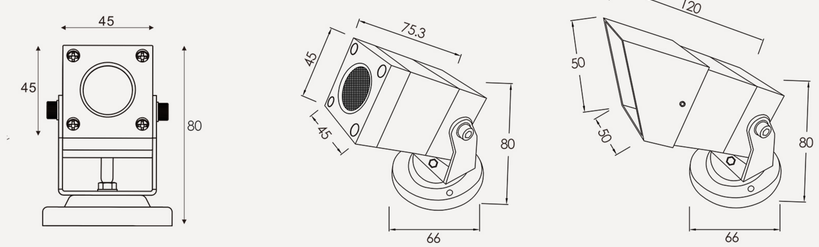

Item No.	Light source	Lens beam angle (°)	Consumption (watt)	Input Voltage (V)	Ik rate
S83311	1x1W	8°/15°/20°/30°/45°/60°	1.1	DC12V/DC24V	02
S83311H	1x1W	8°/15°/20°/30°/45°/60°	1.3	AC120V-AC240V	02
S83312	1x2W	8°/15°/20°/30°/45°/60°	2.2	DC12V/DC24V	02
S83312H	1x3W	8°/15°/20°/30°/45°/60°	3.3	AC120V-AC240V	02
S83316	1x3W RGB3in1	30°/45°/60°	3.2	DC12V/DC24V	02
BS835068	1*6W LED	15°/25°/38°/60°	6.2	DC24V/AC220-240V	02

IP65 OUTDOOR RATED | RoHS Compliant | CE

COB LED Garden Spot Light/
COB LED spike light

BS835068

BS835068+antiglare hood

Outer Dimensions

Unit:mm

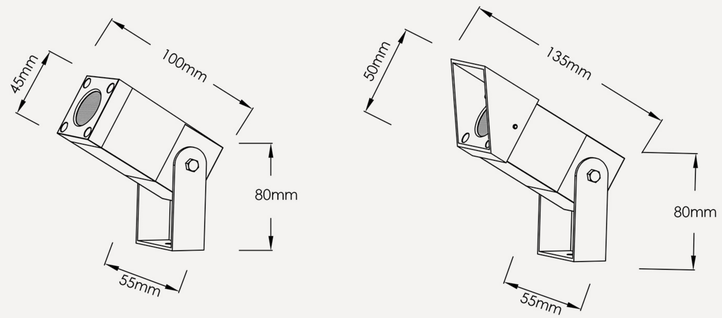

Material specifications

Housing&face cover:	Aluminum anodized finshing or powder painting
Glass:	Tempered glass.T=3mm
Lens:	Optical lens, efficiency≥85%
Cable gland:	Copper and nickel coated
Gasket:	Tooling shaped seal
LED:	SMD LED
Driver:	Constant current output single color LED=1-circuit output RGB 3in1 LED-3-circuit output
Operating temperature:	-20°C～40°C
Power cable:	H05RN-F 2x0.75mm²L=1m(low voltage) H05RN-F 3x0.75mm²L=1m(high voltage)