Small Size LED Inground Light&LED deck light

80011/80017

HE80011/HE80017

Frosted glass/diffused glass

Outer Dimensions: Unit:mm

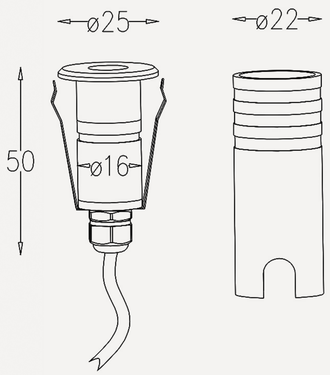

80011/80017

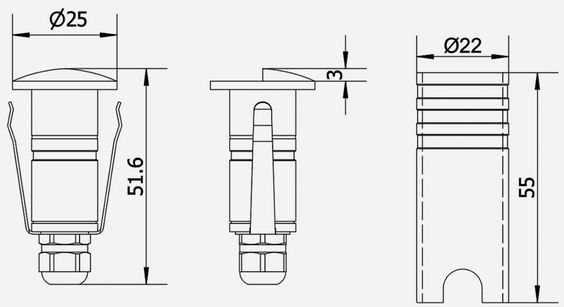

HE80011/HE80017

Item No.	Light source	Lens beam angle(°)	Consumption (watt)	Input Voltage(V)
80011/HE80011	1x1W LED	15°/30°/45°/60°	1.1	DC12V/DC24V
80017/HE80017	1x0.5W LED	120°	0.5	DC12V/DC24V

Connection Demo:

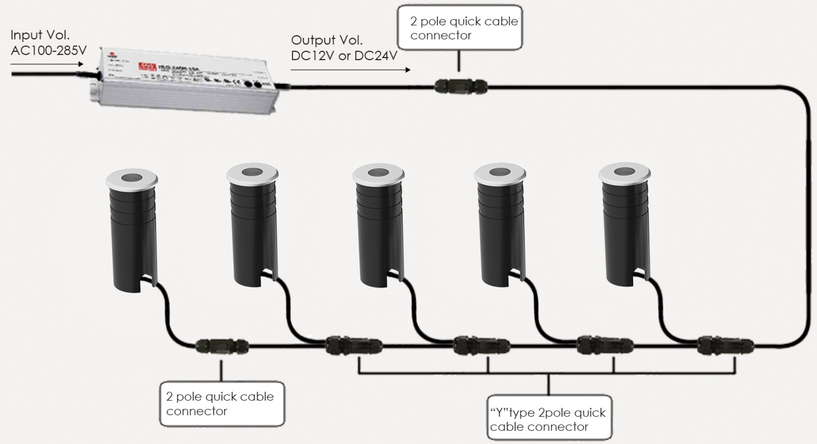

Material specifications

Housing:	Aluminum anodized or outdoor powder coated finish housing T=60-80um Adhesion of ISO class 1/ASTM class 4B
Front cover:	SS304 # / SS316 # / Aluminum
Lens:	Optical lens, efficiency≥85%
Glass:	Tempered step glass T=7mm
Gasket:	Molding shaped silicone seal
Operating temperature:	-20°C～40°C
Power cable:	H05RN-F 2×0.5mm² L=0.5m(low voltage)
Mounting sleeve:	Aluminum