COB LED Garden Spot Light/COB LED spike light

B83514COB

B83314COB

Outer Dimensions — Unit:mm

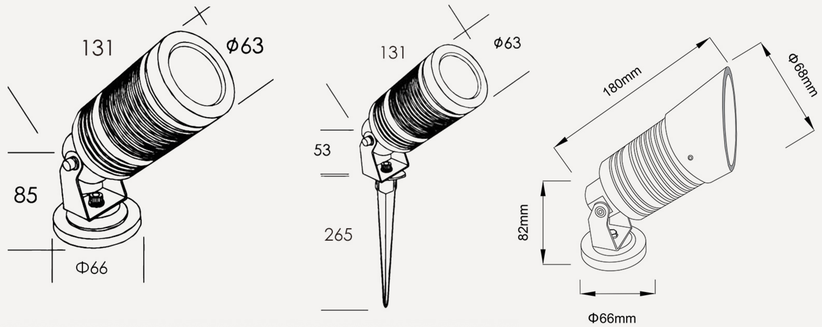

Material specifications

Housing	Aluminum anodized finshing & powder painting
Glass:	Tempered glass. T=3mm
Lens:	Optical lens, efficiency≥85%
Cable gland:	Copper and nickel coated
Gasket:	Tooling shaped seal
LED:	CREE COB LED
Driver:	Constant current outputut
Spike:	PVC(grey or black)
Mounting base:	Aluminum anodized finshing or powder painting.
Power cable:	H05RN-F 2x0.75mm2 L=1m(low voltage) H05RN-F 3x0.75mm2 L=1m(high voltage)

B83510COB+antiglare hood

IP65 OUTDOOR RATED | RoHS Compliant | CE

14W COB, 36° Photometric Data of Luminaire:

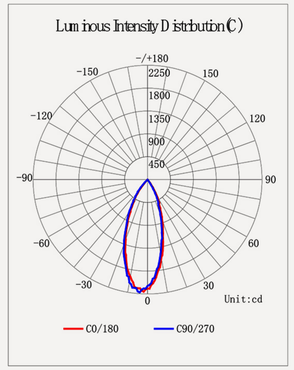

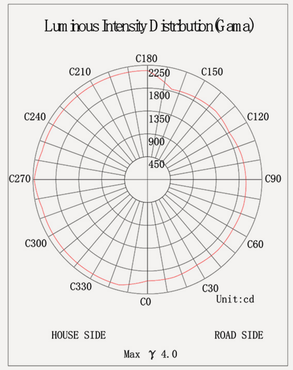

Item No.	Light source	Lens beam angle(°)	Consumption (watt)	Input Voltage(V)	Ik rate
B83314COB B83514COB	1x14W CREE	15°/25°/38°/60°	14.1	DC12V/DC24V	04
B83314COB B83514COB	1x14W CREE	15°/25°/38°/60°	15.2	AC120V/AC240V	04