Diffuser

Tiny type LED underground light

Stainless steel face cover(with frosted glass)

B82711/B82712

Material specifications

Housing:	Aluminum with outdoor dark grey powder coated T=60-80um Adhesion of ISO class 1/ASTM class 4B
Front cover:	304# or 316#Stainless Steel
Lens:	Optical lens, efficiency≥85%
Glass:	Tempered step glass T=4mm
Glass pressure capacity:	Full area =250kgs
Gasket:	Molding shaped silicone seal
Operating temperature:	-20˚C ~ 40˚C
Power cable:	H05RN-F 2×0.75mm² L=0.5m(low voltage) H05RN-F 3×0.75mm² L=0.5m(for Single color/high voltage) H05RN-F 4×0.75mm² L=0.5m(for RGB)
Mounting sleeve(optional):	ABS

Installation diagram

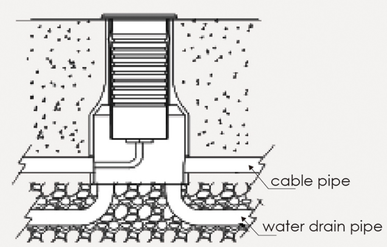

***Note:**

1. Item No. with "H" stands for "input voltage AC100-240V"
2. Item No. with "AS" stands for "Asymmetrical lens"
3. Any special customization, to be confirmed with us

Item No.	Light source	Lens beam angle(˚)	Consumption (watt)	Input Voltage(V)	Ik rate
82711/B82711(H/AS) /B82711S(H/AS)	1x1W LED	8°/15°/30°/45°/60°	1.2	DC12V DC24V AC100-240V	08
82712/B82712(H/AS) /B82712S(H/AS)	1x2W LED	8°/15°/30°/45°/60°	2.6	DC12V DC24V AC100-240V	08

IP67 OUTDOOR RATED | RoHS Compliant | CE

Up light

Mini LED Inground light/LED step light

Stainless steel face cover(with lens&clear glass)

82711/82712

Outer Dimensions: Unit:mm

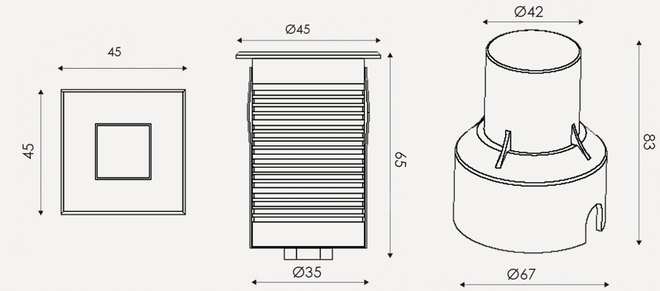

B82711S/B82712S/B82737S B82711/B82712/B82737 mounting sleeve

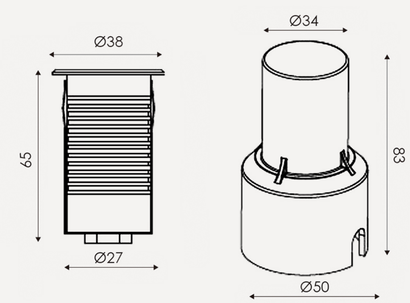

82711/82712 mounting sleeve