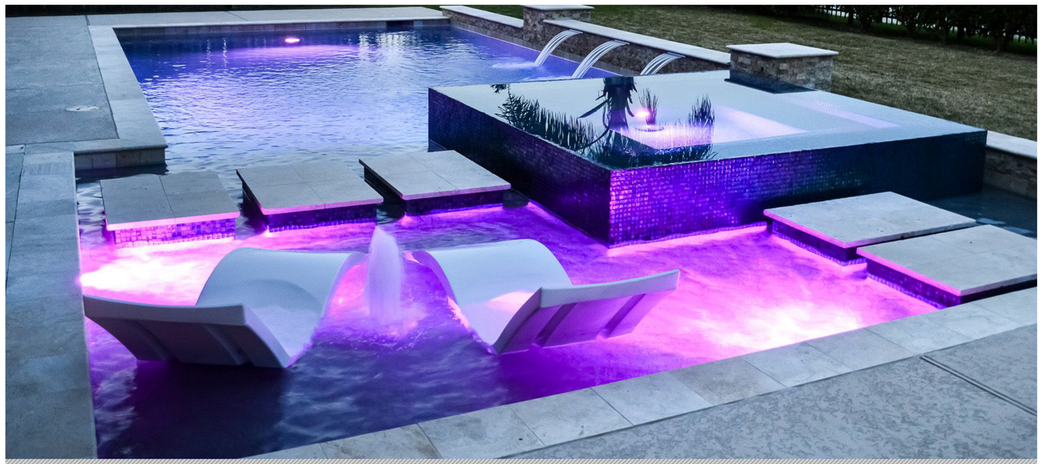

IP68 RECESSED UNDERWATER /UNDERGROUND LIGHT

Suitable for applications with water or without water

With plastic back box

Lamp body back

JPD1406X

Material specifications

Housing & Front cover:	Hard chromeplated Molding shaped stainless steel SUS 316L#
Glass:	Step tempered glass T = 8mm
Lens:	High quality optical lens, efficiency≥85%
Cable gland:	IP-68 PG-11 nickel coated copper
PCB:	Excellent heat conductivity aluminum , coefficient of heat conductivitye≥2.0w/mk
Driver:	Constant current output Single color LED=1-circuit output RGB 3inl LED=3-circuits output
Power cable:	H05RN-F 2*0.75mm²L=2m(for single color) H05RN-F 4*0.75mm²L=2m(for RGB) H05RN-F 5*0.75mm²L=2m(for RGBW)
Application environment:	Temperature of water between -20°C ~40°C less than 2M meter depth
Mounting sleeve:	Plastic

Size (mm)

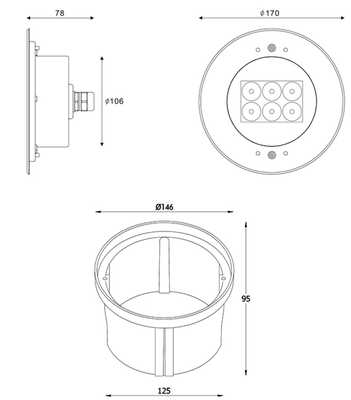

Mounting sleeve

Asymmetrical lens

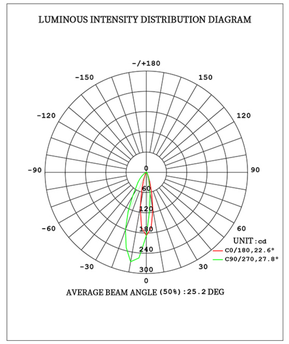

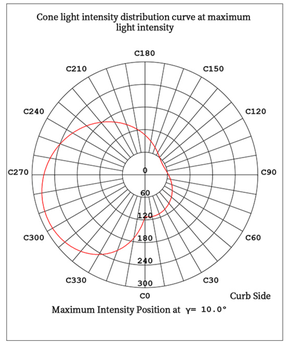

*Warning:
Must be installed under the water to prevent the lights from being burnt off because of the over-heating.

Item No.	Light source	Lens beam angle (°)	Consumption (watt)	Input Voltage (V)	Ik rate
JPD14061	6X1W LED	8°/15°/25°/ 30°/45°/60°/90°	6.0	DC24V	08
JPD14062	6X2W LED	8°/15°/25°/ 30°/45°/60°/90°	12.1	DC24V	08
JPD14066	6x2W RGB3in1 LED	8°/15°/25°/ 30°/45°/60°/90°	12.0	DC24V	08
JPD14069	6x3W RGBW4in1 LED	25°/ 30°/45°/60°/90°	18.0	DC24V	08