IP67 Ultra thin side-emitting Underground Light

Driver-over LED Light/Stainless Steel trim

1E825187UM

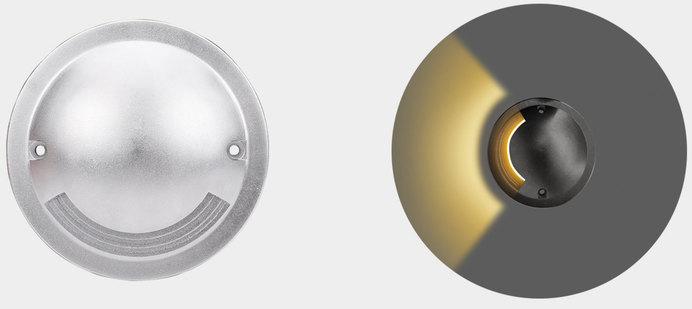

2E825187UM

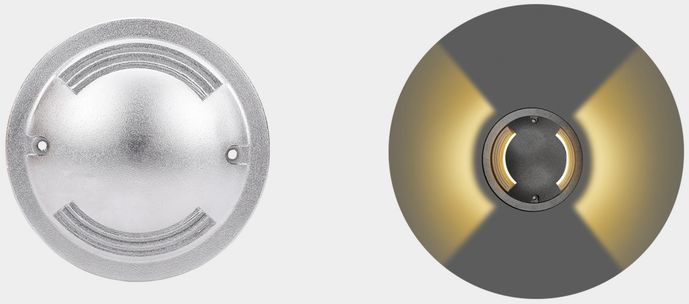

4E825187UM

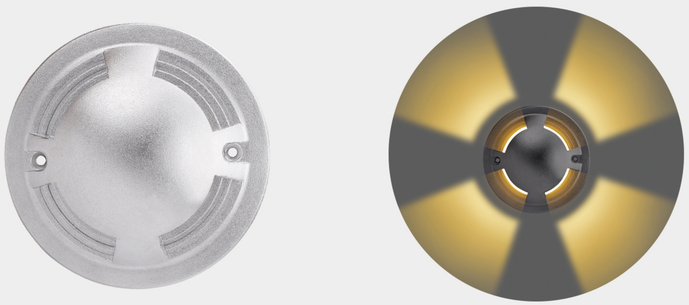

Size（unit : mm）

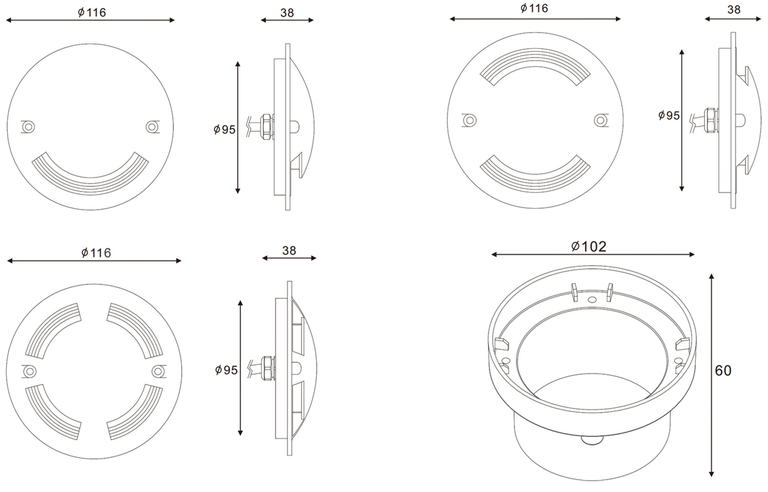

Mounting sleeve

Material specifications

Housing:	Pure aluminum 6063# housing, outdoor powder painted or anti-UV anodized
Front cover:	Hard chrome plate 304# or 316#Stainless Steel
Diffuser:	PMMA
Pressure capacity:	＞1800kgs
Gasket:	Molding shaped silicone seal
Operating temperature:	-20°C～40°C
Power cable:	H05RN-F 2x0.75mm²L=0.5m(low voltage) H05RN-F 4x0.75mm²L=0.5m(for RGB)
Mounting sleeve:	PVC

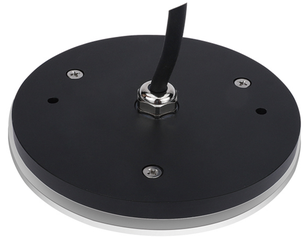

Item No.	Light source	Lens beam angle (°)	Consumption (watt)	Input Voltage (V)	Ik rate
1E825187UM	OSRAM SMD LED	One window	6.0	DC24V	10
2E825187UM	OSRAM SMD LED	Two windows	6.0	DC24V	10
4E825187UM	OSRAM SMD LED	Four windows	6.0	DC24V	10