IP67 Ultra-thin Underground Light

Stainless Steel trim

1E84367UM

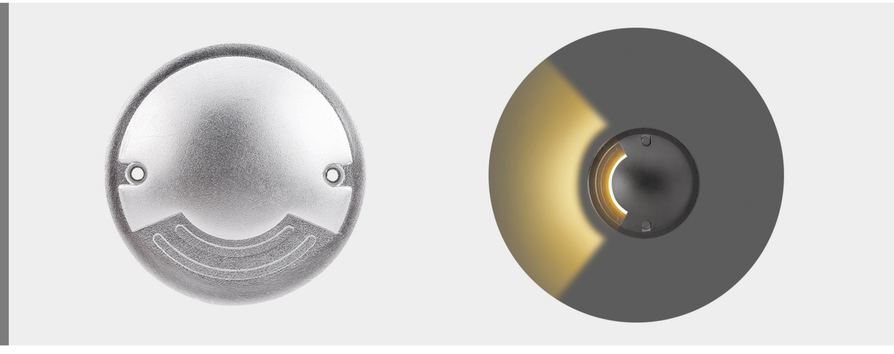

2E84367UM

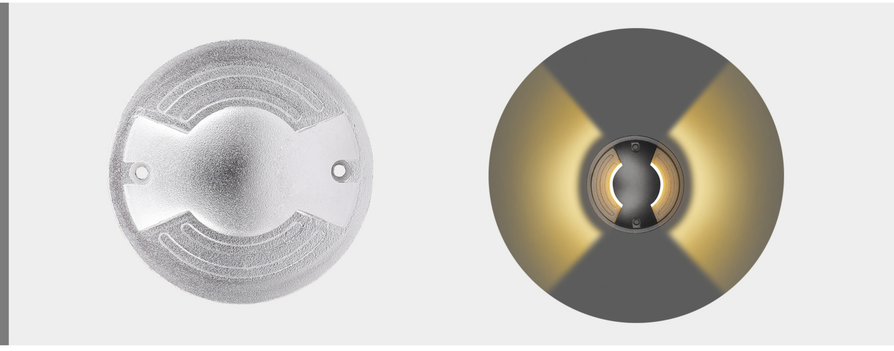

4E84367UM

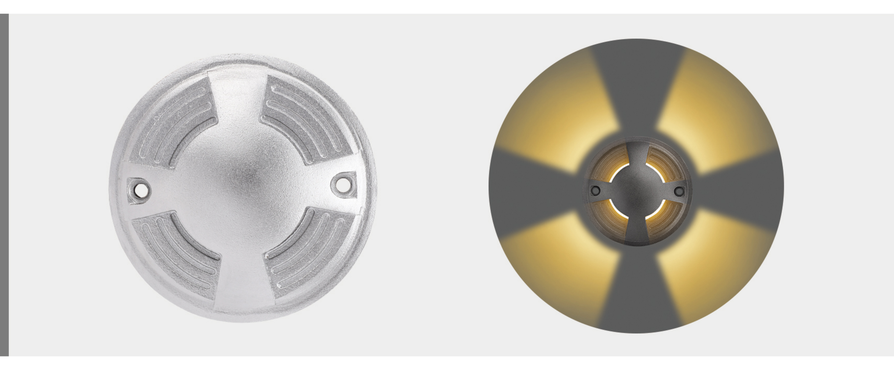

IP67 OUTDOOR RATED | RoHS Compliant | CE

Size（unit : mm）

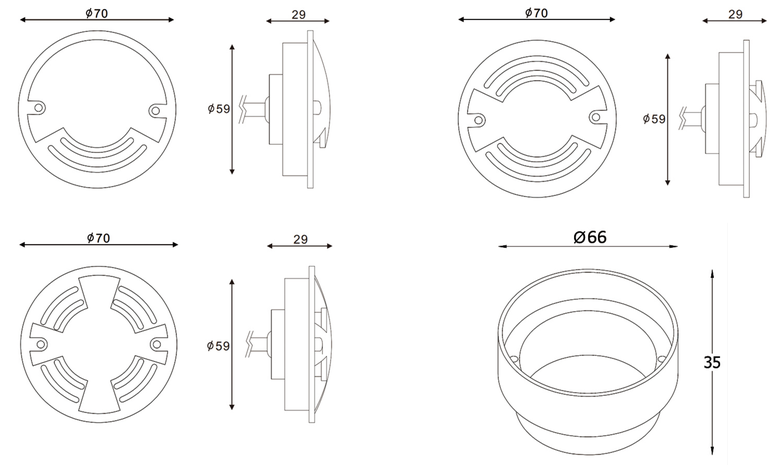

Mounting sleeve

Material specifications

Housing:	Pure aluminum 6063# housing, outdoor powder painted or anti-UV anodized
Front cover:	Hard chrome plate 304# or 316#Stainless Steel
Diffuser:	PMMA
Pressure capacity:	＞1500kgs
Gasket:	Molding shaped silicone seal
Operating temperature:	-20°C～40°C
Power cable:	H05RN-F 2x0.75mm²L=0.5m(low voltage) H05RN-F 4x0.75mm²L=0.5m(for RGB)
Mounting sleeve:	PVC

Item No.	Light source	Lens beam angle (°)	Consumption (watt)	Input Voltage (V)	Ik rate
1E84367UM	OSRAM SMD LED	One window	2.4	DC24V	10
2E84367UM	OSRAM SMD LED	Two windows	2.4	DC24V	10
4E84367UM	OSRAM SMD LED	Four windows	2.4	DC24V	10