IP65 OUTDOOR RATED | RoHS Compliant | CE

LED GARDEN SPIKE LIGHT & LED LAWN LIGHT

RGBW4in1

8383X

838110

LED GARDEN SPOT LIGHT

RGBW4in1

8303X

830110

Housing color option

Grey painting RAL9007	Silver painting RAL9006
Matt black RAL9005	Dark grey RAL7012

- LED Colour Temperature
  - 2700K• 3000K
  - 4000K• 6000K
- optics
  - •8°/15/25/30/45/60/90°

Material specifications

Housing	12#Die-casting powder coated aluminum. T=60-80μm Adhesion of ISO class 1/ASTM class 4B
Frontcover:	Stainless steel SUS 304 or 316
Bracket:	Powder coated aluminum
Glass:	Tempered glass. T=4mm
Lens:	Optical lens,efficiency≥85%
Cable gland:	P-67 PG-9 PA66
Gasket:	Molding shaped silicone double seal
Power cable:	H05RN-F 2x0.75mm²L=1m(low voltage) H05RN-F 3x0.75mm²L=1m(high voltage) H05RN-F 4x0.75mm²L=1m(for RGB)
Spike:	PVC(grey or black)
Mounting base:	Powder coated die-casting aluminum

Outer Dimensions — Unit:mm

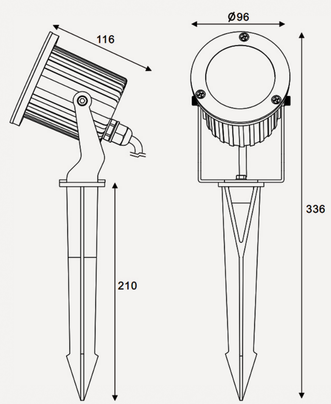

Outer Dimensions — Unit:mm

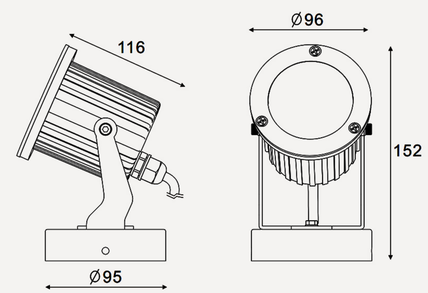

Input voltage is according to LED bulb spec

Item No.	Light source	Lens beam angle(°)	Consumption (watt)	Input Voltage(V)	Ik rate
83831 83031	3x1W	8°/15°/20°/30°/45°/60°	3.2	DC12V/DC24V	04
83831H 83031H	3x1W	8°/15°/20°/30°/45°/60°	3.5	AC120V/AC240V	04
83832 83032	3x2W	8°/15°/20°/30°/45°/60°	6.2	DC12V/DC24V	04
83832H 83032H	3x2W	8°/15°/20°/30°/45°/60°	7.5	AC120V/AC240V	04
83836 83036	3x3W RGB3in1	30°/45°/60°	3.2	DC12V/DC24V	04
83839 83039	3x4W RGBW4in1 (W=3000/4000/6000K)	30°/45°/60°	13.2	DC24V	04
838110 830110	GU10 socket	N/A	N/A	N/A	05