Small Size LED Garden Spot Light

832511

832511+antiglare hood

- LED Colour Temperature
  - 2700K • 3000K
  - 4000K • 6000K
- optics
  - 8°/15°/30°/45°/60°

Housing color option

- Matt black RAL9005
- Dark grey RAL7012
- Aluminum anodized

Material specifications

Housing&face cover:	Aluminum anodized finshing or powder painting
Glass:	Tempered glass. T=3mm
Lens:	Optical lens, efficiency≥85%
Cable gland:	Copper and nickel coated
Gasket:	Tooling shaped seal
LED:	SMD LED
PCB:	Excellent heat conductivity aluminum, coefficient of Heat Conductivity≥2.0w/mk
Driver:	Constant current output single color LED=1-circuit output
Operating temperature:	-20°C~40°C
Power cable:	H05RN-F 2x0.75mm²L=0.5m(low voltage)

Outer Dimensions: Unit:mm

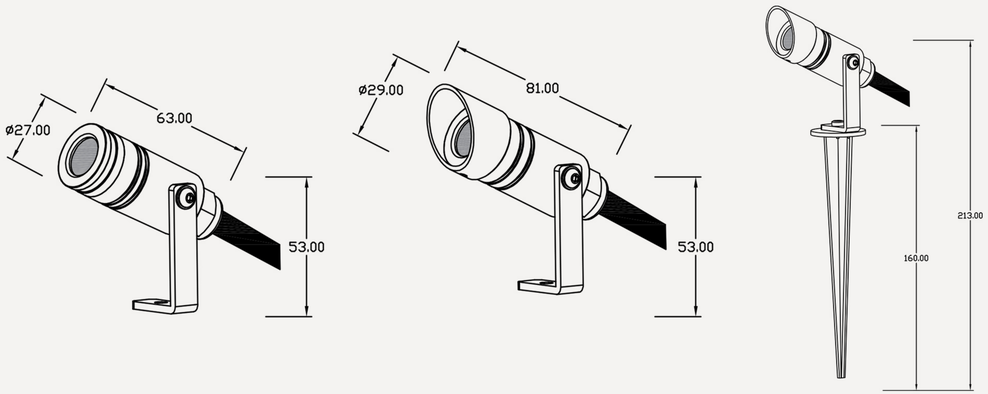

Item No.	Light source	Lens beam angle(°)	Consumption (watt)	Input Voltage(V)
832511	1x1W LED	8°/15°/30°/45°/60°	1.1	DC12V/DC24V

Optional part: Frosted glass /Honeycomb Louver /Aluminum spike

a.Frosted glass

b.Honeycomb Louver

c.Aluminum spike