IP67 Ultra-thin Underground Light

Stainless Steel trim

1E82512UM

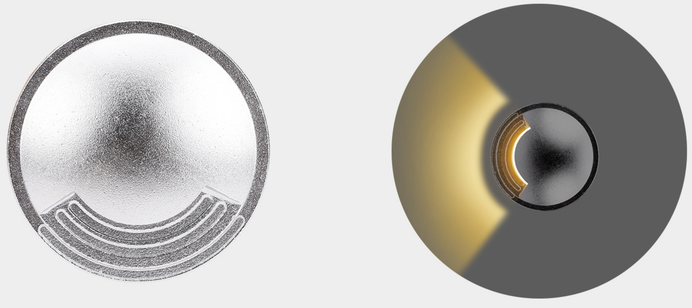

2E82512UM

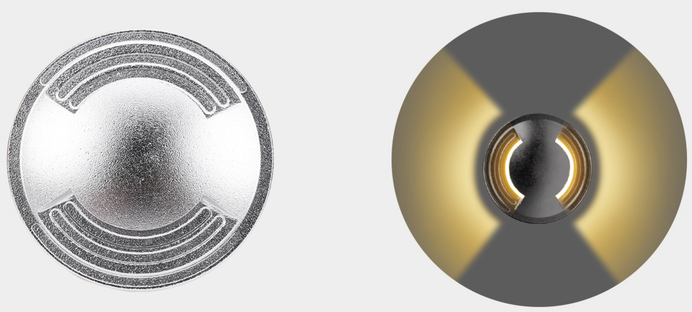

4E82512UM

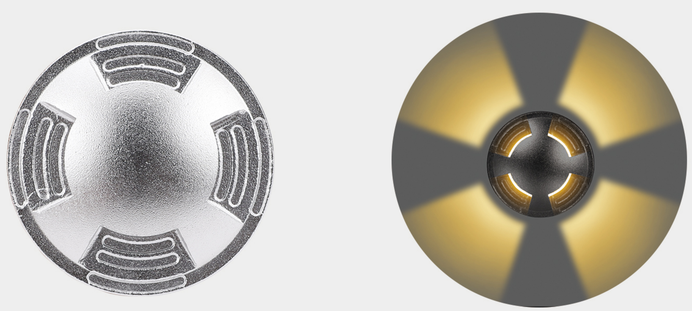

Size（unit : mm）

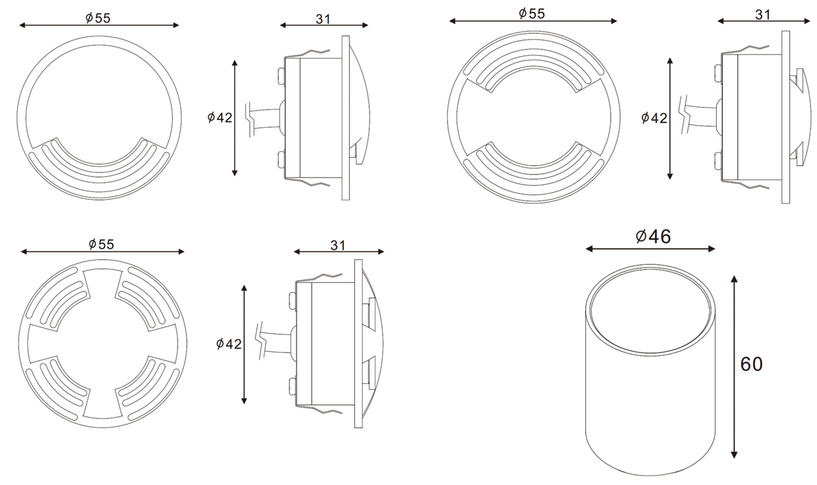

Mounting sleeve

Material specifications

Housing:	Pure aluminum 6063# housing, outdoor powder painted or anti-UV anodized
Front cover:	Hard chrome plate 304# or 316#Stainless Steel
Diffuser:	PMMA
Pressure capacity:	＞1200kgs
Gasket:	Molding shaped silicone seal
Operating temperature:	-20°C～40°C
Power cable:	H05RN-F 2x0.75mm²L=0.5m(low voltage) H05RN-F 4x0.75mm²L=0.5m(for RGB)
Mounting sleeve:	Aluminum back box

Item No.	Light source	Lens beam angle (°)	Consumption (watt)	Input Voltage (V)	Ik rate
1E82512UM	1x2W LED	One window	2.0	DC12V/DC24V	10
2E82512UM	1x2W LED	Two windows	2.0	DC12V/DC24V	10
4E82512UM	1x2W LED	Four windows	2.0	DC12V/DC24V	10